S^2LDM: Synergizing Local Decomposition and Structural Memory for Remote Sensing Change Detection

Shuying Li, Yuchen Wang, Chuang Yang, *Member, IEEE,*

***Abstract*—Remote sensing change detection (RSCD) is a key technology to analyze the spatio-temporal change information of land surface, which is of great significance in urban expansion monitoring and disaster assessment. However, existing remote sensing feature extraction methods rely on traditional fusion mechanisms, which lack the ability to perceive boundary shifts and dynamic changes of small objects, and are easy to lose important long-term dependencies in the process of structure guidance. To address these limitations, this paper proposes a RSCD change detection network combining local decomposition and structural memory. It integrates the Local Structure Decomposition Convolution (LSDC) module and the Gated Key Pixel Structure Memory (GKSM) module. The former is injected into the residual network, and the large receptive field is used to dynamically guide the local convolution weights to realize the enhanced feature representation of global-local complementarity. Through the selective feature enhancement mechanism of cyclic update, the GKSM model prevents excessive flow or loss of information while maintaining efficient cross-level feature interaction. Extensive experiments demonstrate the effectiveness of the proposed S^2LDM. The proposed method achieves state-of-the-art performance on the three datasets, and exceeds the existing comparison methods in the accuracy index.**

***Index Terms*—Remote sensing change detection, feature extraction, feature fusion, perceptual boundary, spatio-temporal changes.**

I. Introduction

REMOTE sensing change detection is used to identify land surface changes from multi-temporal remote sensing images, which is a fundamental task in many remote sensing applications [1]. At present, convolutional neural networks are widely used to extract image hierarchical spatial features, which improve the robustness of RSCD under complex lighting conditions and scene changes [2]. However, most CNN methods are limited in their performance when dealing with complex scenes such as boundary displacements and small object changes [3]. As a result, subtle and critical changes are often obscured or ignored. Recent studies have explored multi-scale feature fusion and context aggregation strategies to fuse local and global information. However, when high-level structural features are directly used to guide low-level representations, long-term dependencies may be attenuated.

In recent years, convolutional neural networks (CNNs) have become the dominant method in the field of remote sensing image classification and segmentation. Most encoder-decoder structures like UNet [4] can effectively compensate for the details lost in the decoder after introducing skip connections. To further transform RSCD into a semantic segmentation task, Peng *et al.* [5] proposed an improved version of UNet network, which introduces a Res2Net multi-scale residual module in the encoder to stack the input images into the network, and further introduces a multi-side output fusion strategy to capture multi-scale change information. Cao *et al.* [6] fused the low-level features provided by ResNet18 with the directional texture features extracted by Gabor filters to enhance the ability of boundary detection. However, the directional texture features cannot fully express the detail changes of small objects, resulting in poor boundary segmentation results. Although the network under the CNN framework improves the multi-scale feature representation through skip connection and hierarchical convolution, it is difficult to adaptively characterize the local geometric structure according to the input content. The Transformer architecture mainly uses pixel-level prediction and classification. To make up for the shortcomings of CNN in long-term dependence and global modeling, researchers design a hybrid framework of CNN and Transformer [7]. Ding *et al.* [8] adopted a spatio-temporal decoupling followed by fusion strategy in the hybrid network framework to avoid forced coupling in the early stage and reduce noise interference. However, the feature fusion stage in this hybrid framework is performed at a single high-level level, which limits the fine cross-scale semantic interaction.

To alleviate the above limitations, we propose S^2LDM, which contains two core modules. Local Structure Decomposition Convolution (LSDC) module in the middle stage of ResNet backbone. The Gated Key-Pixel Structure Memory (GKSM) mechanism was introduced before the decoding stage. Extensive experiments demonstrate the effectiveness of our method over the current state-of-the-art methods.

The main contributions of this work are summarized as follows:

1) We propose LSDC module that decomposes feature maps into spatial neighborhood groups to enhance local structural representation.
2) The GKSM mechanism was designed to enhance the modeling ability of the model to the change of the time dimension and preserve key structural information.

This work was supported in part by the National Natural Science Foundation of China under Grant 62575238 and Grant 62501511, in part by the Key Research and Development Program of Shaanxi Province under Grant 2025CY-YBXM-048, and in part by the Key Scientific Research Program of the Education Department of Shaanxi Province under Grant 24JS048. (*Corresponding author: Chuang Yang.*)

Shuying Li and Yuchen Wang are with the School of Artificial Intelligence and School of Automation, Xi'an University of Posts and Telecommunications, Xi'an 710121, China (e-mail: lishuying@xupt.edu.cn; wyc0116@stu.xupt.edu.cn).

Chuang Yang is with the Department of Electrical and Electronic Engineering, The Hong Kong Polytechnic University, Hong Kong SAR (e-mail:omtcyang@gmail.com).

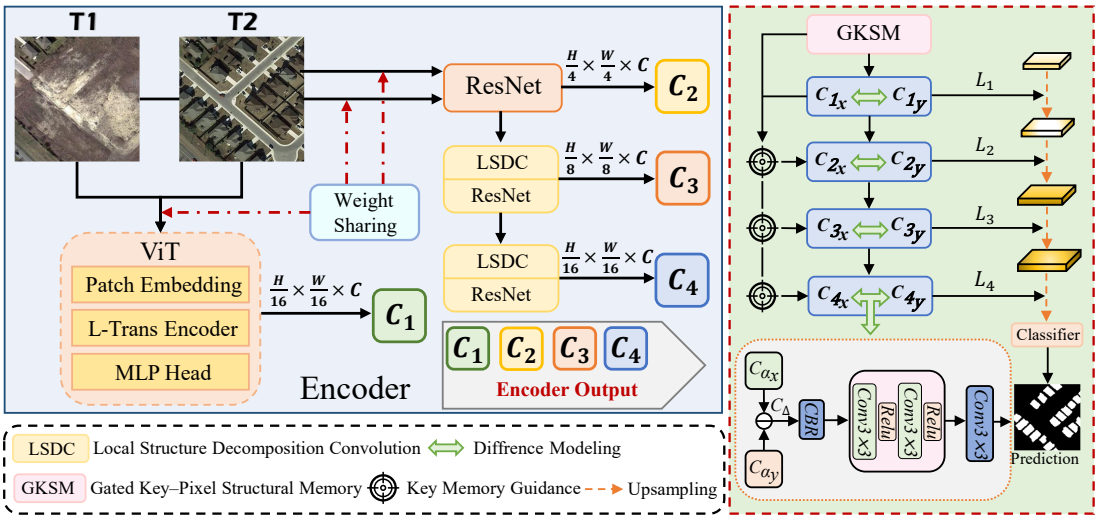

Fig. 1. Overview of the proposed S^{2}LDM.

3) The proposed S^{2}LDM framework achieves effective representation of multi-scale change information, and extensive experiments on various benchmark datasets show the effectiveness of our approach.

II. Methodology

A. Overall Architecture

The overall network architecture of the S^{2}LDM framework is based on the encoder-decoder structure, as shown in Fig. 1. The encoder consists of a ViT global encoder and a modified ResNet local detail encoder parallel branch. In order to sense small object boundary offsets and enhance the representation of local structures, LSDC modules are inserted in layers C_3 and C_4 of the residual network. The LSDC module dynamically aggregates neighborhood information through a learnable spatial kernel, which can more accurately model small object boundary changes. The encoder then outputs a multi-scale feature set $\{C_1, C2, C_3, C_4\}$. Before The decoding stage, the GKSM module uses high-level semantic features as key features, and low-level convolutional features as pixel features to perform feature injection under a unified spatial resolution. By modeling the difference between the current fusion feature and the historical hidden state, the adaptive selection and accumulation of structural information are realized. The decoder adopts a top-down fusion strategy to recover the spatial resolution and integrate the variation information of different scales. Finally, the predicted mask map is output.

B. Local structure decomposition convolution module

In order to alleviate the problem that traditional convolution is difficult to adapt to the subtle dynamic changes of small targets. As shown in Fig. 2, we embed LSDC modules in layers 3 and 4 of the ResNet network to enhance the feature representation with content-adaptive, spatially varying kernels. The LSDC module performs adaptive local aggregation in two stages. In the first stage, location-specific convolutional weights are generated for each spatial position by predicting a

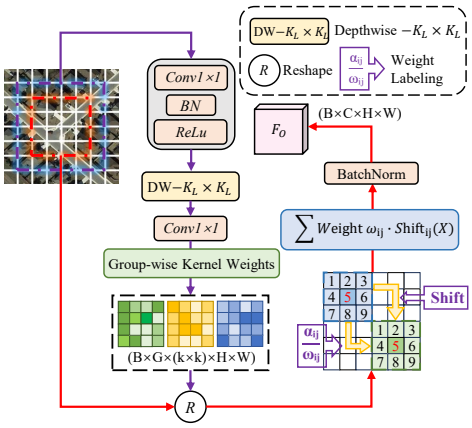

Fig. 2. Overview of the proposed LSDC module. The purple line is the first stage and the red line is the second stage.

set of adaptive weights based on the local context. Specifically, the input features are first transformed by a 1×1 convolution to enable channel interaction and feature projection, and then processed by a depthwise convolution to capture spatial contextual information. This design provides a more expressive feature representation for subsequent dynamic kernel prediction. Instead of generating an independent kernel for each channel, we divide the channels into multiple groups, each of which shares a set of dynamically predicted convolutional weights. This design enables structured feature aggregation within each channel group, enabling the model to capture diverse spatial interactions. The operation is defined as follows:

$$\mathbf{A}_1 = \phi(\mathrm{BN}(\mathrm{Conv}_{1\times1}(\mathbf{X}))), \tag{1}$$

$$\mathbf{A}_2 = \phi(\mathrm{BN}(\mathrm{DepthwiseConv}_{lks\times lks}(\mathbf{A}_1))), \tag{2}$$

where ϕ denotes the ReLU activation function, lks represents the large kernel size, and BN refers to Batch Normalization.

Then, a 1×1 convolution is used to predict the spatially varying kernel weights. The operation is defined as:

$$\mathbf{W}_\mathrm{k} = \mathrm{Conv}_{1\times1}(\mathbf{A}_2), \mathbf{W}_\mathrm{k} \in \mathbb{R}^{B\times G\times(sks)^2\times H\times W}, \tag{3}$$

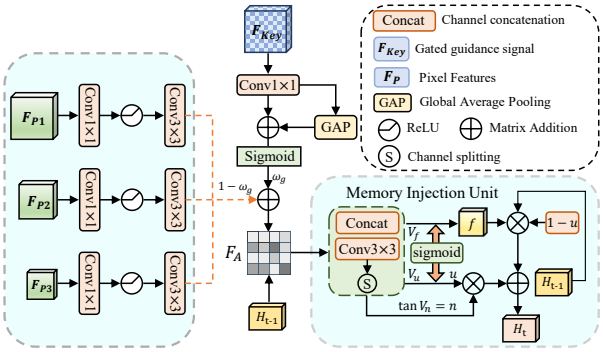

Fig. 3. Overview of the proposed GKSM module.

where G is the number of groups. Specifically, the input feature channels are equally divided into G groups, and each group shares a set of dynamically predicted convolutional kernel weights. sks is the selective kernel size, and (sks^2) denotes the number of kernel parameters predicted at each position.

The second stage utilizes the predicted dynamic weights to selectively aggregate the input features. The operation is defined as:

$$\mathbf{Y}(h,w) = \sum_{i=0}^{sks-1}\sum_{j=0}^{sks-1} \mathbf{W}^{(i,j)}(h,w)\cdot \mathcal{S}_{(i-p,j-p)}(\mathbf{X}), \quad (4)$$

where $p = \lfloor sks/2 \rfloor$ denotes the padding offset for symmetric aggregation. $\mathcal{S}_{(\Delta_h,\Delta_w)}(\cdot)$ denotes a spatial shift operator that samples features from location $(h+\Delta_h, w+\Delta_w)$ of the input feature map. Thus, Eq. (4) performs a weighted aggregation of features within an $sks \times sks$ neighborhood centered at (h,w). Zero-padding is applied to handle boundary positions.

C. Gated key–pixel structural memory module

As shown in Fig. 3, the GKSM module dynamically balances the contributions of key features and pixel features through a gated mechanism, so as to enhance the expression of fine-grained spatial information while maintaining structural consistency. Firstly, the pixel features are convolutional projected and aligned to enhance the local spatial information. Then, the global semantic information is introduced, the key features are adaptively averaged pooled, and they are added with the local key features. The gated weight is applied to the key features while the complementary weight $(1-\omega_g)$ is applied to the pixel features, enabling the model to dynamically balance global semantic cues and local spatial details during feature fusion. The final output features are fused by key features and pixel features according to gated weights. The operation is defined as:

$$\mathbf{F}_p' = \mathrm{Conv}_{3\times3}\left(\sigma\left(\mathrm{Conv}_{1\times1}(\mathbf{F}_p)\right)\right), \quad (5)$$

$$\mathbf{F_{key}}' = \mathrm{Conv}_{1\times1}(\mathbf{F_{key}}), \quad (6)$$

$$\omega_g = \sigma\left(\mathrm{Conv}_{1\times1}(\mathbf{F_{key}}) + \mathrm{GAP}(\mathbf{F_{key}}')\right), \quad (7)$$

$$\mathbf{F}_\mathrm{A} = (\mathbf{F_{key}} + \mathrm{GAP}(\mathbf{F_{key}}')\odot\omega_g) + \mathbf{F}_p'\odot(1-\omega_g), \quad (8)$$

where $\mathbf{F}_{key}$ is the key feature map, $\mathbf{F}_p$ is the pixel feature map, σ is the sigmoid activation function, GAP is the global average pooling, and $\odot$ is element-wise multiplication.

Although the attention mechanism can highlight important features through feature reweighting, it lacks an explicit mechanism to preserve the historical representation. Then, the memory injection unit performs a gated memory update between the fused feature representation $\mathbf{F}_A$ and the historical state $\mathbf{H}_{\mathrm{t}-1}$. Firstly, the fused feature and the previous hidden state are processed through a convolutional layer to generate intermediate gated features. The convolution output is further divided along the channel dimension into three components corresponding to the forget gate $\mathbf{f}$, update gate $\mathbf{u}$, and candidate features $\mathbf{n}$. These components are used to control the update of the memory state via a gated update formula, enabling the model to adaptively retain historical information while injecting new fused representations. In this way, the feature representation can be progressively refined while maintaining structural consistency. The memory update operation can be stated as follows:

$$\mathbf{V} = \mathrm{Conv}_{3\times3}(\mathbf{F}_\mathrm{A} \oplus \mathbf{H}_{\mathrm{t}-1}), \quad (9)$$

$$\mathbf{V} = [\mathbf{V}_f, \mathbf{V}_u, \mathbf{V}_n], \quad (10)$$

$$\mathbf{f} = \sigma(\mathbf{V}_f), \quad \mathbf{u} = \sigma(\mathbf{V}_u), \quad \mathbf{n} = \tanh(\mathbf{V}_n) \quad (11)$$

$$\mathbf{H}_\mathrm{t} = \mathbf{f}\odot\mathbf{H}_{\mathrm{t}-1}\odot(1-\mathbf{u}) + \mathbf{u}\odot\mathbf{n}, \quad (12)$$

where $\mathbf{V}_f$ represents the degree of forgetting. $\mathbf{V}_u$ indicates how much new information is introduced. $\mathbf{V}_n$ is the candidate feature. σ is the sigmoid function and $\tanh$ is the nonlinear activation of the feature. $\mathbf{H}_{\mathrm{t}-1}$ represents the hidden state at the last moment, which is used to store the historical structure information and participate in the gating update together with the current fusion feature.

III. Experiments and Discussion

A. Datasets and Implementation Setup

To demonstrate the effectiveness of S^{2}LDM in RSCD, we conduct experiments on three public datasets. LEVIR-CD [9], WHU-CD [10] and SYSU-CD [11] datasets, respectively. In our experiments, the proposed S^{2}LDM framework is trained using NVIDIA RTX 4090 GPU with batch size 16. We use the Adam optimizer with weight decay. The initial learning rate is set to 2e-4. The maximum number of iterations is 80K. All comparative experiments were carefully aligned with their original publications in Settings to ensure a fair comparison.

B. Comparison With Methods

In terms of performance validation, the proposed method is compared with nine other methods, including CNN-based methods FC-EF [12] and SNUNet [13]; Transformer-based methods BIT [14], ChangeFormer [15], Paformer [16], and STRobustNet [17]; and Mamba-based methods RS-Mamba [18], ChangeMamba [19], and CDMamba [20].

1) Qualitative Assessment: To verify the effectiveness of the proposed S^{2}LDM method, Fig. 4 shows the visualization results of different datasets in various scenarios and RSCD.

TABLE I
QUANTITATIVE COMPARISONS ON THREE DATASETS. THE BEST IN **BOLD RED** AND THE SECOND-BEST ON **BOLD BLUE**. ALL INDICATORS ARE DESCRIBED AS PERCENTAGES.

Method		FC-EF	SNUNet	BIT	ChangeFormer	Paformer	STRobustNet	RSMamba	ChangeMamba	CDMamba	**Ours**
LEVIR-CD	P	91.17	89.93	91.55	90.65	**91.76**	90.94	91.03	90.55	91.43	**92.73**
	R	86.59	87.45	90.05	87.20	87.59	89.98	88.63	89.10	**90.08**	**91.49**
	OA	98.89	98.86	98.89	98.89	98.97	99.03	98.96	**98.97**	99.06	**99.23**
	F1	88.82	88.67	**90.79**	88.89	89.63	90.45	89.67	89.82	90.75	**92.10**
	IoU	79.89	79.65	**83.14**	81.84	81.21	82.57	81.28	81.52	83.07	**85.34**
WHU-CD	P	92.02	83.34	91.57	91.85	92.86	91.85	**95.68**	93.14	95.58	**95.83**
	R	87.99	90.88	92.55	84.11	90.85	92.06	**95.50**	91.62	92.01	**94.20**
	OA	97.68	98.91	99.22	99.07	97.98	99.36	98.96	99.40	**99.51**	**99.61**
	F1	89.99	86.95	92.06	87.81	91.85	91.96	91.56	92.37	**93.76**	**95.01**
	IoU	81.75	76.91	85.30	78.27	84.92	85.12	**95.59**	85.83	88.26	**90.49**
SYSU-CD	P	75.93	**88.43**	79.04	80.04	82.26	77.79	76.89	80.04	81.92	**84.86**
	R	**81.03**	61.43	75.96	77.06	73.84	79.92	78.04	77.06	76.58	**81.55**
	OA	89.47	89.05	89.58	90.06	90.08	**90.72**	89.29	90.06	90.50	**92.22**
	F1	78.40	72.64	77.47	78.52	77.82	78.84	77.46	78.52	**79.16**	**83.17**
	IoU	64.47	57.04	63.23	64.64	63.70	65.07	63.21	64.64	**65.51**	**71.19**

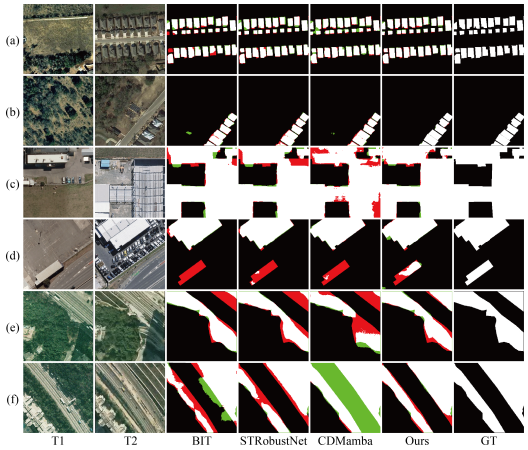

Fig. 4. Visualization results of comparison methods on three datasets. Red and green indicate missed pixels and misdetected pixels, respectively.

The proposed method reduces false positive detection in most scenes, especially in complex scenes or small-scale changes, and can locate the change area more accurately. However, it can still be observed that the proposed method may still produce slight false detections in the edge regions. This is mainly because shadow noise is still challenging for feature representation.

2) Quantitative Evaluation: In Table I, the comparative evaluation of various algorithms on the three datasets is summarized. This rigorous evaluation framework covers key metrics such as P, R, OA, F1, and IoU to comprehensively evaluate the performance of different algorithms. As shown in the table, the proposed method achieves better change detection performance in F1/IoU metrics on the three datasets.

C. Ablation Study

1) Perform ablation experiments on major components: A comprehensive ablation study verifies the contribution of each module. As shown in Table II, after adding LSDC or GKSM module to the baseline model alone, the F1/IoU index is improved by 0.58%/0.84% and 1.01%/1.46%, respectively, and the full S^2LDM achieves the best performance, which fully verifies its effect. As can be seen from Fig. 5, the F1 values of the two modules are higher than the baseline model as a whole and show a trend towards stability, indicating that they both have a positive effect on RSCD.

TABLE II
PERFORM ABLATION EXPERIMENTS ON MAJOR COMPONENTS.

Models		SYSU-CD				
LSDC	GKSM	P	R	OA	F1	IoU
✗	✗	**85.38**	78.75	91.57	81.93	69.39
✓	✗	82.84	**82.19**	91.78	82.51	70.23
✗	✓	85.23	80.77	92.16	82.94	70.85
✓	✓	84.86	81.55	**92.22**	**83.17**	**71.19**

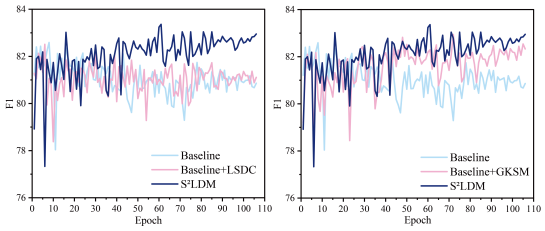

Fig. 5. F1-score curves on the SYSU-CD trainvall set.

TABLE III
ABLATION STUDY ON THE NUMBER OF LSDC EMBEDDING LAYERS

Layers	P	R	OA	F1	IoU
C2/C3	82.42	**82.40**	91.70	82.41	70.08
C2/C4	**84.18**	80.61	91.72	82.35	70.02
C3/C4(Ours)	82.84	82.19	91.78	**82.51**	**70.23**

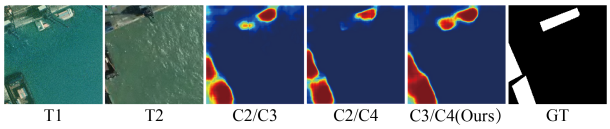

Fig. 6. Heatmap visualization of LSDC embedding typical adjacent layers.

2) Study on the number of embedding layers of LSDC: In order to explore the impact of inserting LSDC into different

TABLE IV
ABLATION STUDY IN THE INNER STAGE OF THE LSDC MODULE.

Stages	P	R	OA	F1	IoU
only 1	**83.86**	80.98	**91.84**	82.40	70.06
only 2	83.36	81.20	91.75	82.27	69.88
1-2(Ours)	82.84	82.19	91.78	**82.51**	**70.23**

TABLE V
ABLATION EVALUATIONS OF DIFFERENT METHODS ARE REPLACED IN GKSM OF THE FRAMEWORK.

Methods	P	R	OA	F1	IoU
GA	82.18	**82.11**	91.58	82.15	69.70
EUCB	85.44	78.32	91.49	81.73	69.35
MASAG	**85.78**	78.84	91.93	82.16	69.73
GKSM(Ours)	85.23	80.77	**92.16**	**82.94**	**70.85**

layers on the performance, we use the SYSU dataset for comparative evaluation. Table III shows that the best results are obtained when inserting pairs of C3/C4 layers.

3) Ablation study in the inner stage of LSDC: To explore the impact of different internal stages of LSDC on the performance, we conduct a comparative evaluation using the SYSU dataset. Table IV shows that each stage improves the performance of the baseline model. The F1/IoU of the full model is the highest.

4) Different methods to replace GKSM ablation evaluation: we also analyze and compare the performance of GKSM with other methods. As shown in the Table V, GKSM was replaced by GA [21], EUCB [22], and MASAG [23]. The F1/IoU of the GKSM method is improved. This shows that GKSM effectively avoids the loss of information information in the process of structure guidance.

IV. CONCLUSION

In this study, we propose S^2LDM, a change detection network based on a parallel CNN-Transformer encoding framework. The LSDC module uses a content-adaptive spatially variable convolution kernel to dynamically model the local neighborhood, which significantly improves the model's ability to perceive small-scale object changes and boundary shifts. The GKSM module was introduced, and the problem of excessive loss or redundant propagation of information was effectively avoided through the gated cyclic update mechanism. Extensive experiments on three benchmark datasets show that the proposed S^2LDM outperforms other state-of-the-art methods. Future research should focus on exploring lightweight network architectures and developing an advanced ensemble semi-supervised learning framework to alleviate the dependence of model training on large-scale labeled datasets.

REFERENCES

[1] L. Zhao, M. Yang, Y. Zhao, Y. Liu, H. Jiang, and Z. Yang, "Df2net: A differential-feature dynamic-fusion network for building change detection in remote sensing images," *IEEE Transactions on Geoscience and Remote Sensing*, vol. 64, pp. 1–15, 2026.

[2] S. Li, Y. Wang, S. Zhang, and C. Yang, "Ha2f: Dual-module collaboration-guided hierarchical adaptive aggregation framework for remote sensing change detection," *IEEE Transactions on Geoscience and Remote Sensing*, vol. 64, pp. 1–13, 2026.

[3] S. Li, Q. Ma, S. Zhang, W. Wang, and C. Yang, "Mdafnet: Multiscale differential edge and adaptive frequency guided network for infrared small target detection," *IEEE Geoscience and Remote Sensing Letters*, vol. 23, pp. 1–5, 2026.

[4] O. Ronneberger, P. Fischer, and T. Brox, "U-net: Convolutional networks for biomedical image segmentation," in *International Conference on Medical image computing and computer-assisted intervention*. Springer, 2015, pp. 234–241.

[5] F. Chen, N. Wang, B. Yu, and L. Wang, "Res2-unet, a new deep architecture for building detection from high spatial resolution images," *IEEE Journal of Selected Topics in Applied Earth Observations and Remote Sensing*, vol. 15, pp. 1494–1501, 2022.

[6] Z. Cao, Y. Huang, Z. Ji, Y. Zhou, and P. Zhou, "Gf-resformer: A hybrid gabor-fourier resnet-transformer network for precise semantic segmentation of high-resolution remote sensing imagery," *IEEE Journal of Selected Topics in Applied Earth Observations and Remote Sensing*, vol. 18, pp. 23 779–23 800, 2025.

[7] S. Li, Q. Ma, S. Zhang, and C. Yang, "Dccs-det: Directional context and cross-scale-aware detector for infrared small target," *IEEE Transactions on Geoscience and Remote Sensing*, vol. 64, pp. 1–15, 2026.

[8] L. Ding, J. Zhang, H. Guo, K. Zhang, B. Liu, and L. Bruzzone, "Joint spatio-temporal modeling for semantic change detection in remote sensing images," *IEEE Transactions on Geoscience and Remote Sensing*, vol. 62, pp. 1–14, 2024.

[9] H. Chen and Z. Shi, "A spatial-temporal attention-based method and a new dataset for remote sensing image change detection," *Remote sensing*, vol. 12, no. 10, p. 1662, 2020.

[10] S. Ji, S. Wei, and M. Lu, "Fully convolutional networks for multisource building extraction from an open aerial and satellite imagery data set," *IEEE Transactions on geoscience and remote sensing*, vol. 57, no. 1, pp. 574–586, 2018.

[11] Q. Shi, M. Liu, S. Li, X. Liu, F. Wang, and L. Zhang, "A deeply supervised attention metric-based network and an open aerial image dataset for remote sensing change detection," *IEEE transactions on geoscience and remote sensing*, vol. 60, pp. 1–16, 2021.

[12] R. C. Daudt, B. Le Saux, and A. Boulch, "Fully convolutional siamese networks for change detection," pp. 4063–4067, 2018.

[13] S. Fang, K. Li, J. Shao, and Z. Li, "Snunet-cd: A densely connected siamese network for change detection of vhr images," *IEEE Geoscience and Remote Sensing Letters*, vol. 19, pp. 1–5, 2022.

[14] H. Chen, Z. Qi, and Z. Shi, "Remote sensing image change detection with transformers," *IEEE Transactions on Geoscience and Remote Sensing*, vol. 60, pp. 1–14, 2021.

[15] W. G. C. Bandara and V. M. Patel, "A transformer-based siamese network for change detection," in *IGARSS 2022-2022 IEEE International Geoscience and Remote Sensing Symposium*. IEEE, 2022, pp. 207–210.

[16] M. Liu, Q. Shi, Z. Chai, and J. Li, "Pa-former: Learning prior-aware transformer for remote sensing building change detection," *IEEE Geoscience and Remote Sensing Letters*, vol. 19, pp. 1–5, 2022.

[17] H. Zhang, Y. Teng, H. Li, and Z. Wang, "Strobustnet: Efficient change detection via spatial–temporal robust representations in remote sensing," *IEEE Transactions on Geoscience and Remote Sensing*, vol. 63, pp. 1–15, 2025.

[18] K. Chen, B. Chen, C. Liu, W. Li, Z. Zou, and Z. Shi, "Rsmamba: Remote sensing image classification with state space model," *IEEE Geoscience and Remote Sensing Letters*, vol. 21, pp. 1–5, 2024.

[19] H. Chen, J. Song, C. Han, J. Xia, and N. Yokoya, "Changemamba: Remote sensing change detection with spatiotemporal state space model," *IEEE Transactions on Geoscience and Remote Sensing*, vol. 62, pp. 1–20, 2024.

[20] H. Zhang, K. Chen, C. Liu, H. Chen, Z. Zou, and Z. Shi, "Cdmamba: Incorporating local clues into mamba for remote sensing image binary change detection," *IEEE Transactions on Geoscience and Remote Sensing*, vol. 63, pp. 1–16, 2025.

[21] S. G. Kolahi, S. K. Chaharsooghi, T. Khatibi, A. Bozorgpour, R. Azad, M. Heidari, I. Hacihaliloglu, and D. Merhof, "Msa^2 net: Multi-scale adaptive attention-guided network for medical image segmentation," *arXiv preprint arXiv:2407.21640*, 2024.

[22] C. Yang, H. Ma, and Q. Wang, "Instance mask growing on leaf." in *BMVC*, 2023, pp. 4–6.

[23] X. Han, J. Gao, C. Yang, Y. Yuan, and Q. Wang, "Real-time text detection with similar mask in traffic, industrial, and natural scenes," *IEEE Transactions on Intelligent Transportation Systems*, 2024.